LIFT UNIC-506 (3.0t x 3.4m)

- Total width 1.4m
- Max working radius 15.52m
- Max boom length 15.71m
- Diesel powered and optional mains electric
- Zero length increase with electric option
- Operator control of outrigger extension
- Radio remote control as standard
- Working area limitation
- Slew limitation (optional)
- Intelligent throttle activation for economy and ecology

Crane Specifications

Crane capacity	capacity:	3.0t x 3.4m
Max working radius	max:	5.52m
Max lifting height	approx:	16m
Rope length	max:	21.75m (4 fall), 43.5m (2 fall), 87m (1 fall)
Dimensions	folded:	4870mm (l) x 1400mm (w) x 2035mm (h)
Weight	unladen:	4840kg (4990kg with electric option)
Point loadings	Due to the many variables involved, point loadings are only available on request	
Hook speed	approx:	17m/min (with 4 layers and 4 falls)
Telescopic system	boom length:	3.93 - 15.71m
	telescoping speed:	11.78m/35 seconds
	boom type:	6 section hydraulically telescoping boom
Derricking angle/speed	approx:	0 - 80˚/18.0 seconds
Slewing angle/speed	approx:	360˚ (continuous) 2.5min-1 (rpm)
Traction system	drive:	hydrostatic 2-speed
	travel speed:	0 - 3km/h
	gradability:	23˚
	track ground length:	1750mm
	track ground pressure:	45.1kPa (0.46kg/cm2)
	track width:	300mm
Engine	manufacturer:	Mitsubishi
	fuel:	diesel (electric dual power option)
	maximum output:	18kW (24.5PS) / 2100min-1 (rpm)
	starting method:	electric
	tank capacity:	40 litres
Electric motor	power:	7.5kW
	voltage:	400v AC 50/60Hz
Standard equipment	Computer controlled moment limiter (safe load indicator), overload warning lamps, intelligent voice warning system, radio remote control, intelligent throttle activation	
Optional equipment	4 fall hook block, 2 fall hook block, 1 fall hook block, mains electric dual power (400v), low marking tracks, slew limitation	

Working Range

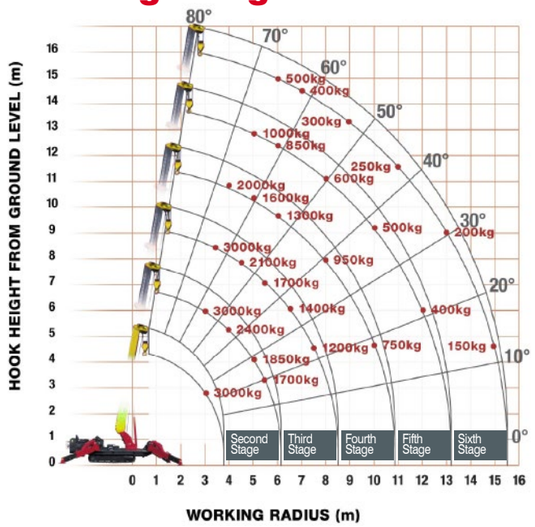

Second Stage

SECOND STAGE EXTENDED 3.93 - 6.33M BOOM LENGTH

Working radius		m	up to 2.5	3.0	3.4	4.0	4.5	5.0	5.5	6.0
Outrigger	Max-extended	kg	3,000	3,000	3,000	2,400	2,100	1,850	1,700	1,550
	Mid-extended	kg	3,000	3,000	3,000	2,400	2,100	1,850	1,700	1,400
	Min-extended	kg	3,000	3,000	3,000	2,400	2,000	1,650	1,350	1,100

Third Stage

THIRD STAGE EXTENDED 6.33 - 8.72M BOOM LENGTH

Working radius		m	up to 3.0	3.4	4.0	4.5	5.0	5.5	6.0	6.5	7.0	7.5	8.53
Outrigger	Max-extended	kg	3,000	3,000	2,400	2,100	1,850	1,700	1,550	1,400	1,300	1,200	1,000
	Mid-extended	kg	3,000	3,000	2,400	2,100	1,850	1,700	1,400	1,200	1,050	850	620
	Min-extended	kg	3,000	3,000	2,400	2,000	1,650	1,350	1,100	900	750	600	450

Fourth Stage

FOURTH STAGE EXTENDED 8.72 - 11.05M BOOM LENGTH

Working radius		m	up to 4.0	4.5	5.0	5.5	6.0	7.0	8.0	9.0	10.0	10.86
Outrigger	Max-extended	kg	2,000	1,800	1,600	1,450	1,300	1,100	950	850	750	640
	Mid-extended	kg	2,000	1,800	1,600	1,450	1,300	1,050	700	600	450	390
	Min-extended	kg	2,000	1,800	1,600	1,350	1,100	750	500	400	300	250

Fifth Stage

FIFTH STAGE EXTENDED 11.05 - 13.38M BOOM LENGTH

Working radius		m	up to 5.0	5.5	6.0	7.0	8.0	9.0	10.0	11.0	12.0	13.19
Outrigger	Max-extended	kg	1,000	920	850	700	600	550	500	450	400	350
	Mid-extended	kg	1,000	920	850	700	600	520	450	390	300	250
	Min-extended	kg	1,000	920	850	700	500	400	300	250	200	170

Sixth Stage

SIXTH STAGE EXTENDED 13.38 - 15.71M BOOM LENGTH

Working radius		m	up to 6.0	7.0	8.0	9.0	10.0	11.0	12.0	13.0	14.0	15.52
Outrigger	Max-extended	kg	500	400	350	300	250	250	200	200	150	150
	Mid-extended	kg	500	400	350	300	250	250	200	200	150	150
	Min-extended	kg	500	400	350	300	250	230	200	170	150	100
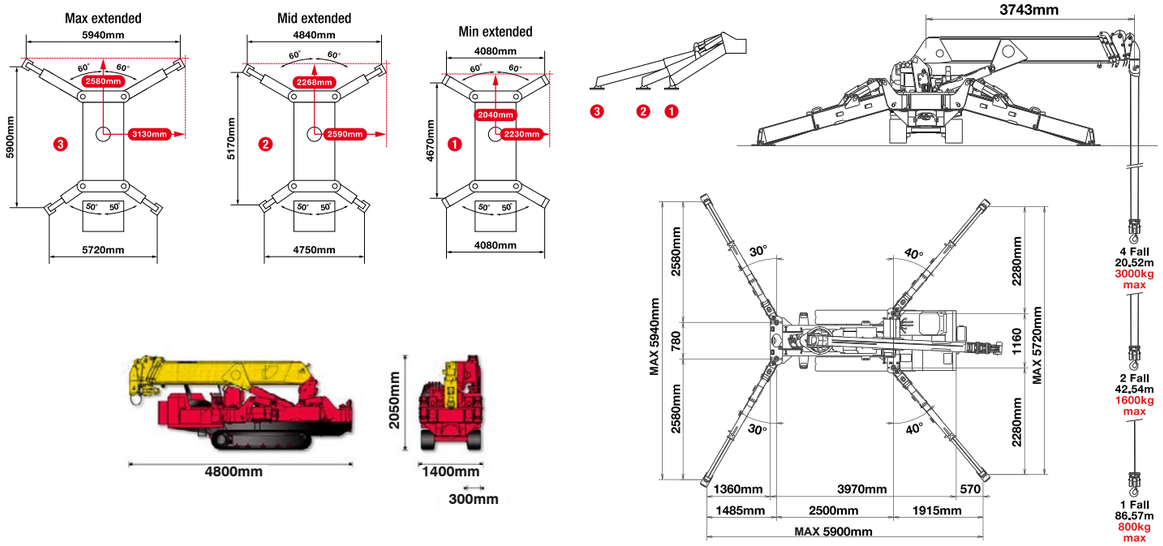
Outrigger Positions